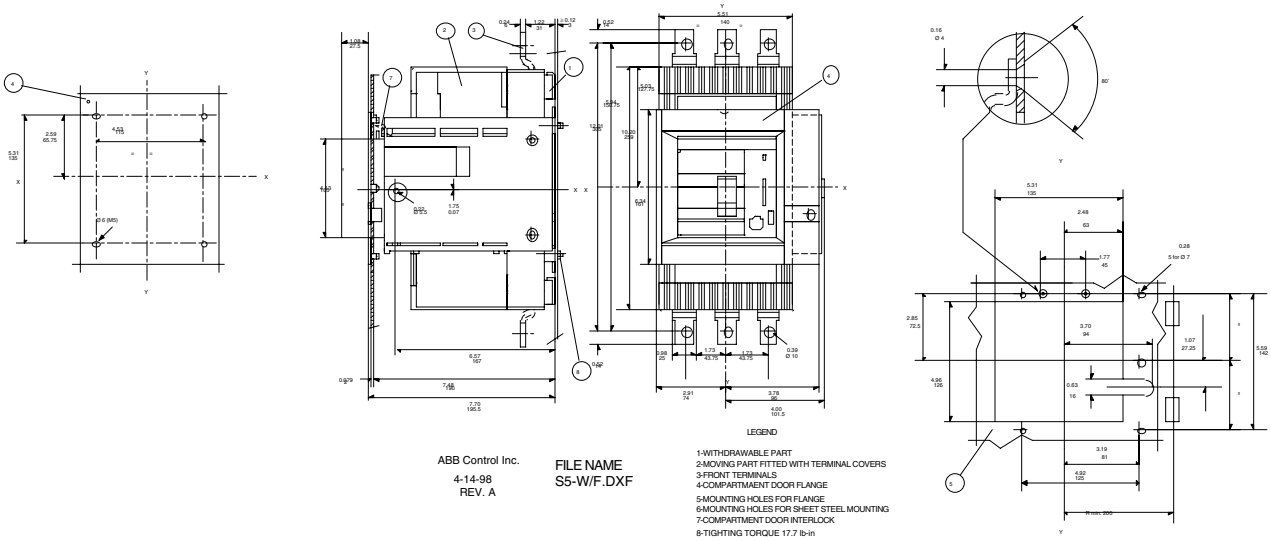

ABB Control Inc.

4-14-98
REV. A

FILE NAME
S5-W/F.DXF

LEGEND

1-WITHDRAWABLE PART
2-MOVING PART FITTED WITH TERMINAL COVERS
3-FRONT TERMINALS
4-COMPARTMAENT DOOR FLANGE
5-MOUNTING HOLES FOR FLANGE
6-MOUNTING HOLES FOR SHEET STEEL MOUNTING
7-COMPARTMENT DOOR INTERLOCK
8-TIGHTING TORQUE 17.7 lb-in