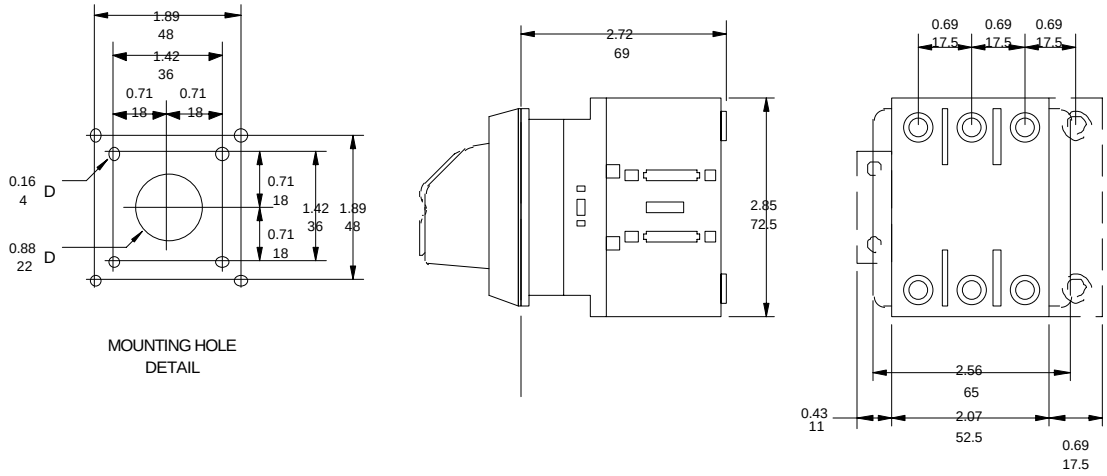
1.89
48
1.42
36
0.71
18
0.71
18
0.16
4
D
0.88
22
D
0.71
18
1.42
36
1.89
48
0.71
18
MOUNTING HOLE
DETAIL
2.72
69
2.85
72.5
0.69
17.5
0.69
17.5
0.69
17.5
2.56
65
0.43
11
2.07
52.5
0.69
17.5

OT...63ET