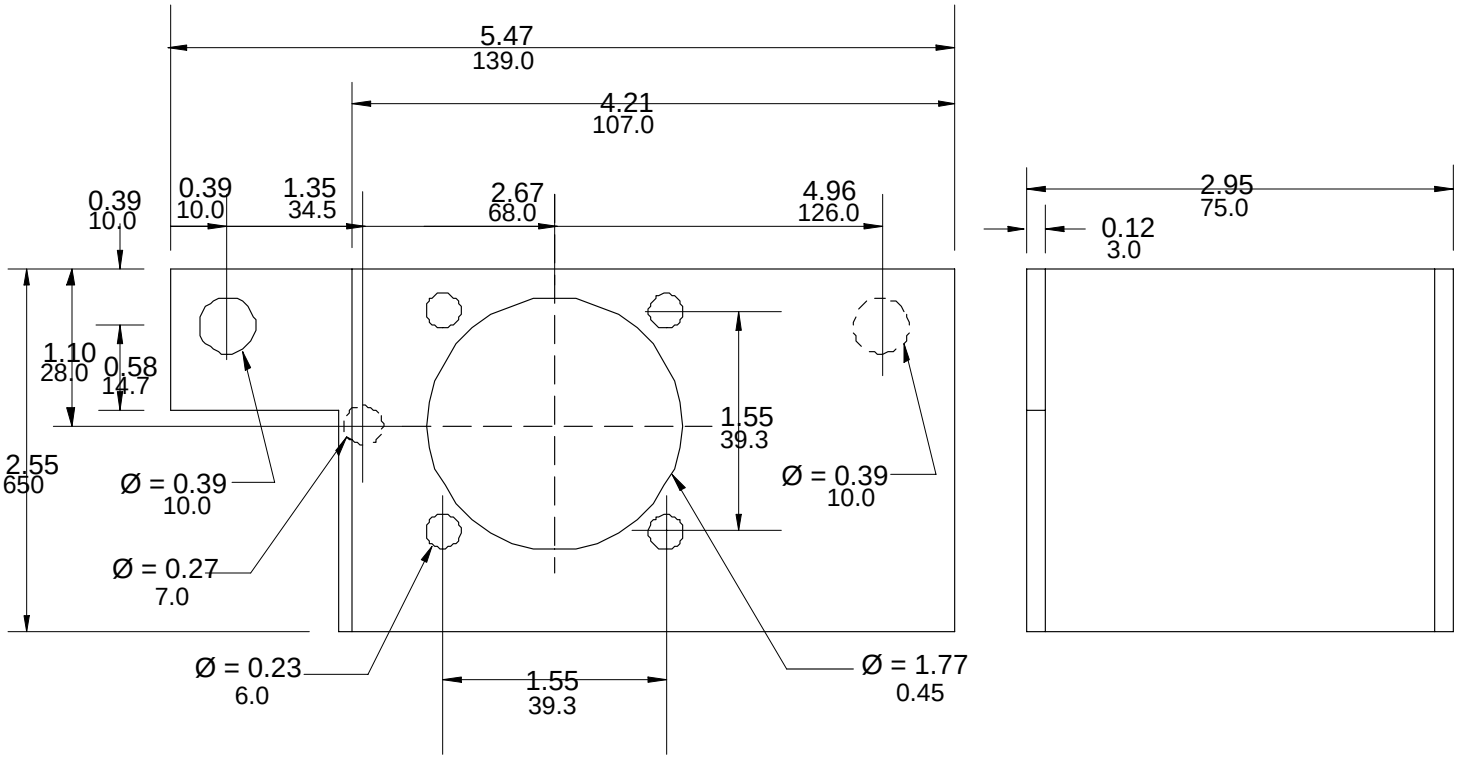

ABB Control Inc.

1-10-97

OETL-ZX71